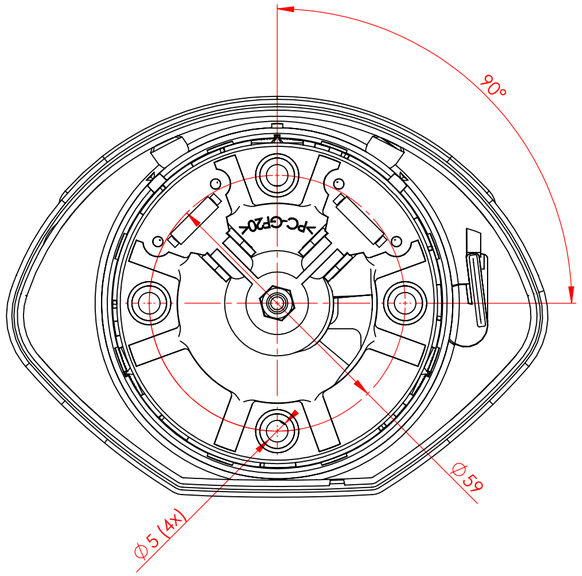

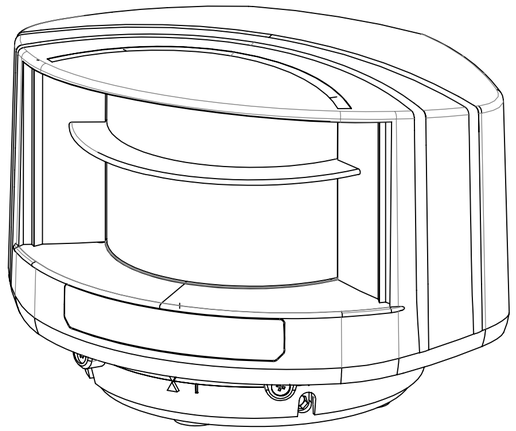

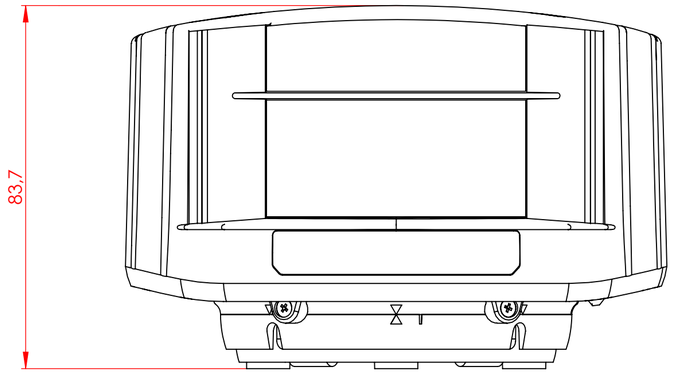

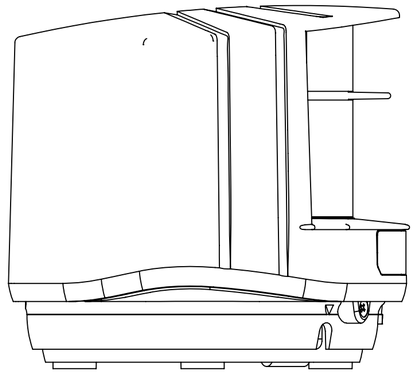

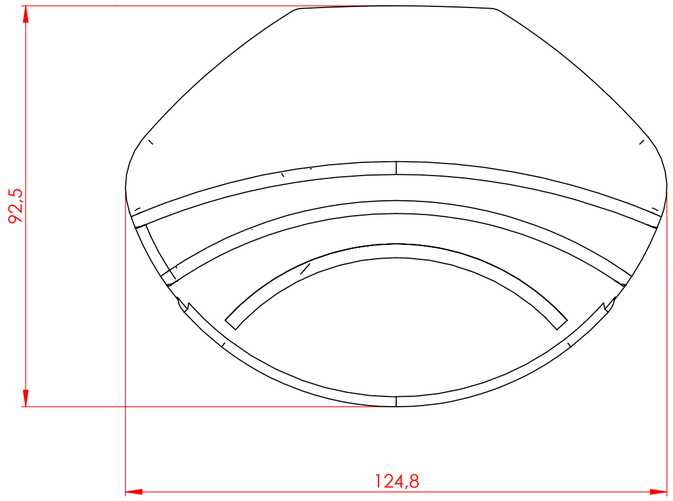

Part Volume : mm³ - Part Weight : gr

THIS DRAWING IS THE PROPERTY OF BEA AND MAY NOT BE REPRODUCED WITHOUT WRITTEN AGREEMENT

MODIFICATIONS LIST

Date :	*By :*	*Description :*	*Ver :*	*Rev :*
-	-	-	-	-
-	-	-	-	-
-	-	-	-	-
-	-	-	-	-
-	-	-	-	-

A HALMA COMPANY
WWW.BEA.BE

PROD. NAME : -
TITLE : -
GENERAL TOLERANCE : -
MATERIAL: - TREATEMENT: -

Objet	Ver.Obj	Doc.	Rev.Doc.	Scale	Size
- . - . - . -				1:1	A2

DRAWER : -
DATE : -
VERIFIED APPROVED

PAGE: 1 / 1

PDM Project : E041 Temps de Vol - File Name : Laser scanner - Plan d'encombrement