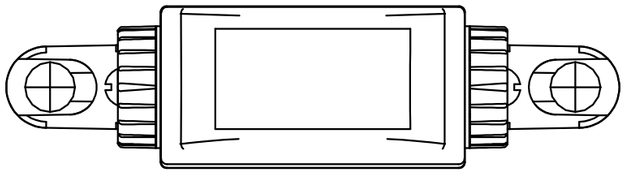

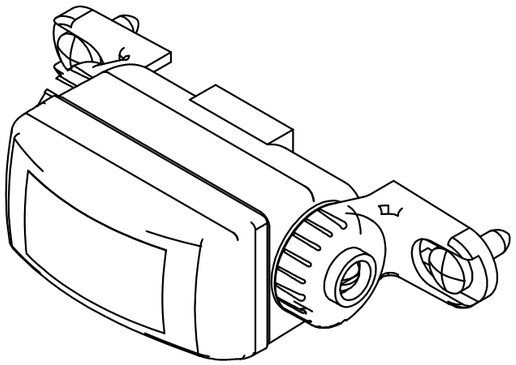

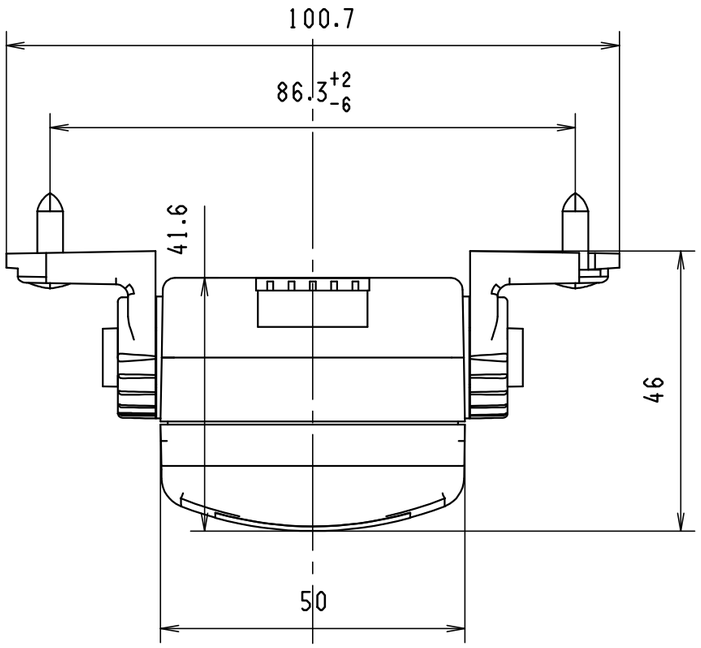

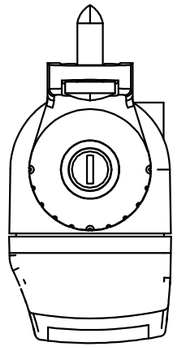

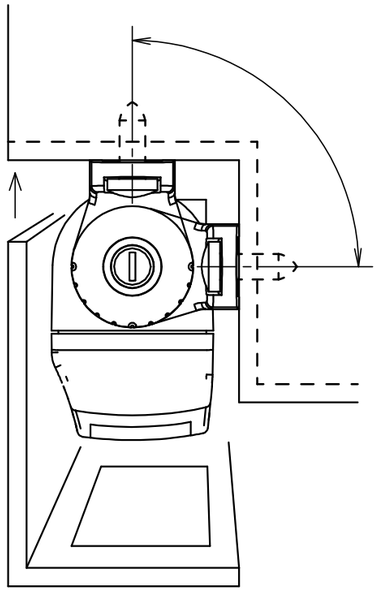

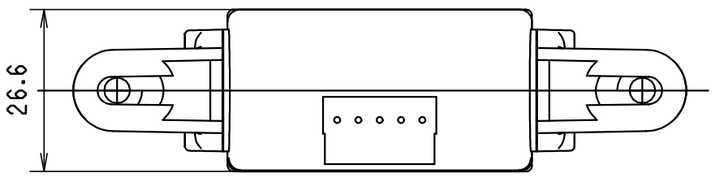

THIS DRAWING IS THE PROPERTY OF **BEA** AND MAY NOT BE REPRODUCED WITHOUT WRITTEN AGREEMENT

BEA	1	TITLE : FLY Dimensions	
	2	DRAWER : ML	DATE : 20/06/2001
	3	SC : 1/1	SIZE : A3
	4	MATERIAL :-	
LIEGE-BELGIUM	5	TREATMENT:-	
VERIFIED / APPROVED	6	GENERAL TOLERANCE :-	
	7	C.A.O. FILE: MCADAM/BER1/E006/FLY_DIM.NA	

MODIFICATIONS LIST

DATE:	BY:	DESCRIPTION:	REL.	VER.

DOC. : PA	OBJET: 41.5496	VER. : NA	PAGE: 01/01