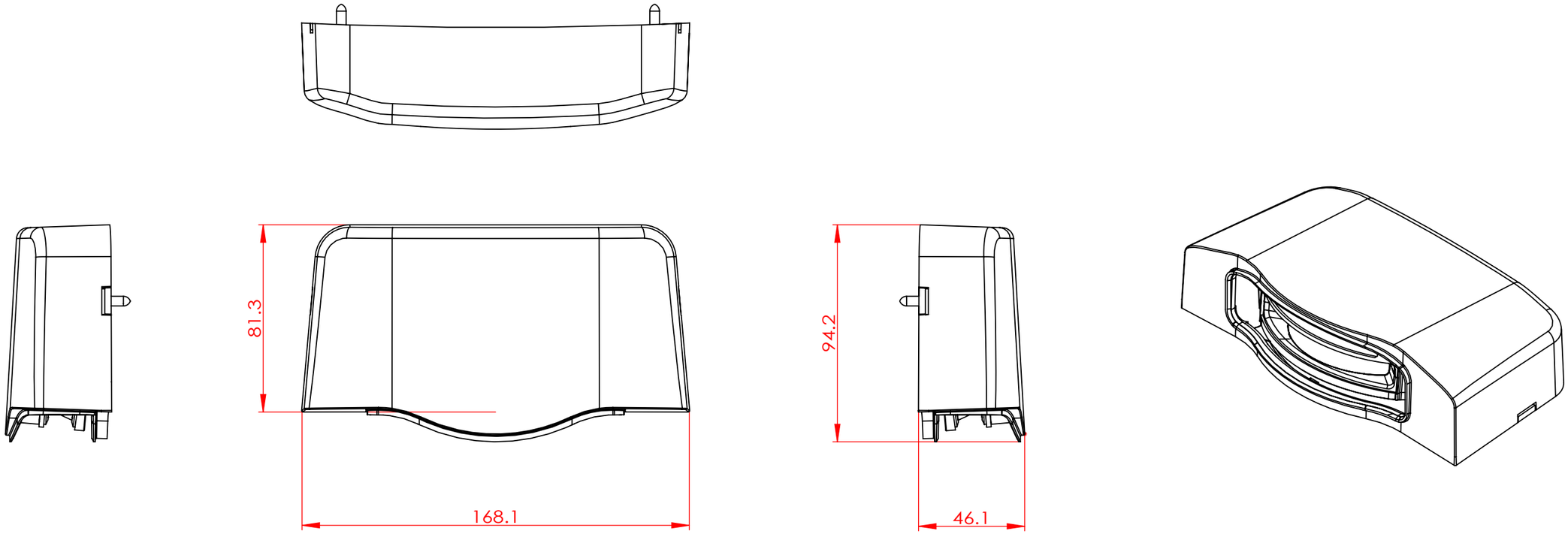

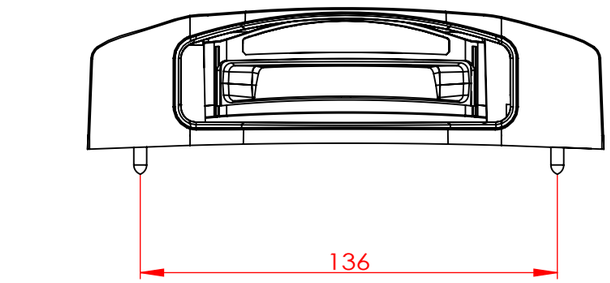

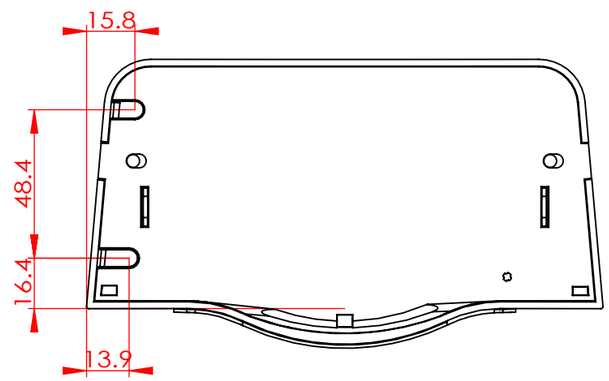

Part Volume : mm³ - Part Weight : gr

THIS DRAWING IS THE PROPERTY OF BEA AND MAY NOT BE REPRODUCED WITHOUT WRITTEN AGREEMENT

MODIFICATIONS LIST

Date :	By :	Description :	Ver. :	Rev. :
X	X	X	X	X
X	X	X	X	X
X	X	X	X	X
X	X	X	X	X
X	X	X	X	X

A HALMA COMPANY
WWW.BEA.BE

PROD. NAME : E371 FLATSCAN RD
TITLE : Surface mounting flatscan rev-pz
GENERAL TOLERANCE : -
MATERIAL: - TREATEMENT: -

Objet	Ver.Obj	Doc.	Rev.Doc.	Scale	Size
- . - . - . -				1:2	A3

DRAWER : WGY
DATE : 17/03/19
VERIFIED APPROVED

PAGE: 1 / 1

PDM Project : - File Name : 4_Assem3_0921