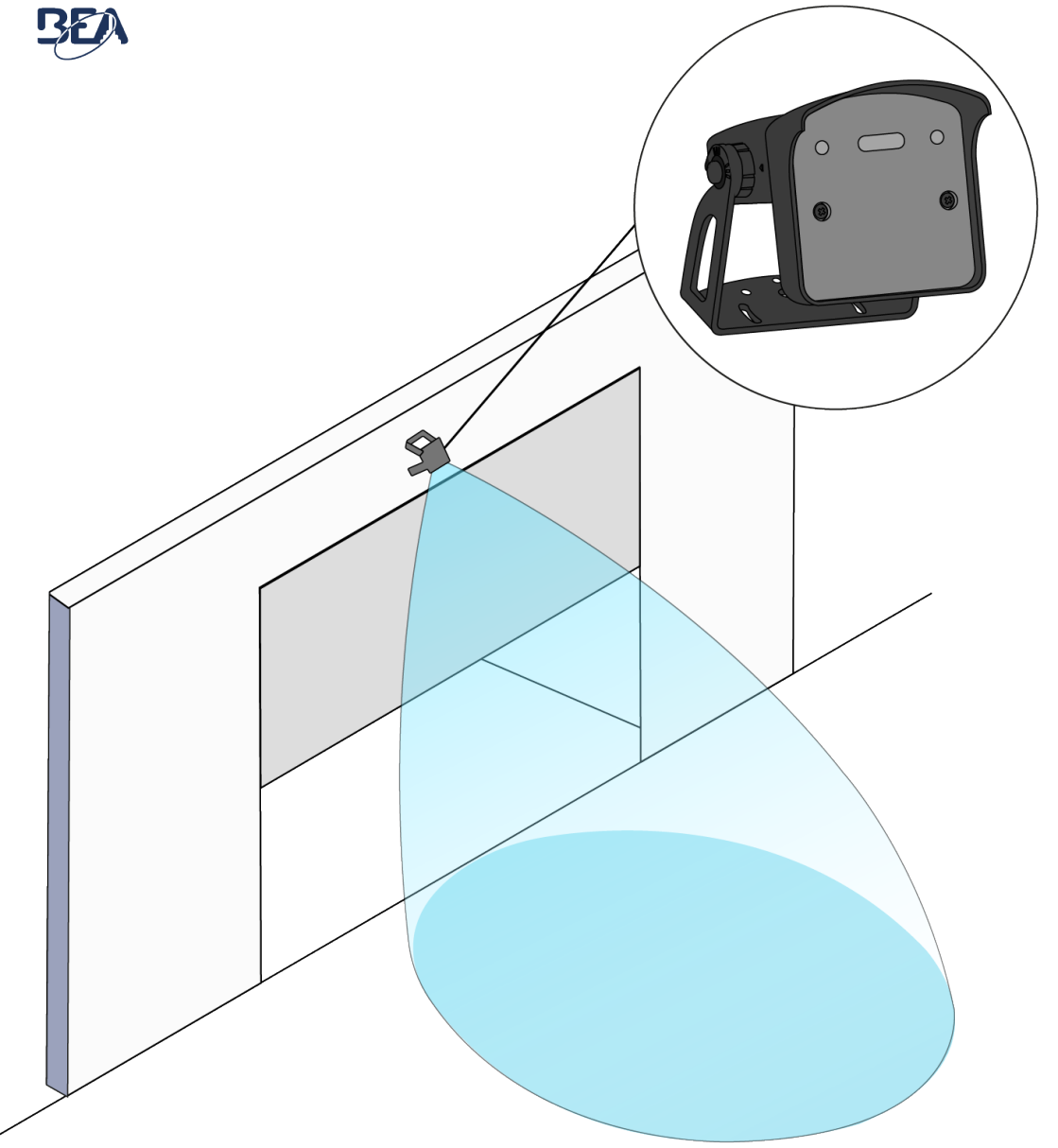

FALCON ARTEK

Opening sensor for automated industrial doors.

User's Guide for software version SW 0100 and higher (refer to tracking label on product)

1. INTENDED USE

The Falcon Artek is an activation sensor for automated industrial doors powered by advanced Artek radar technology.

The Falcon Artek is capable of switching the radar lobe shape from narrow to wide and vice versa.

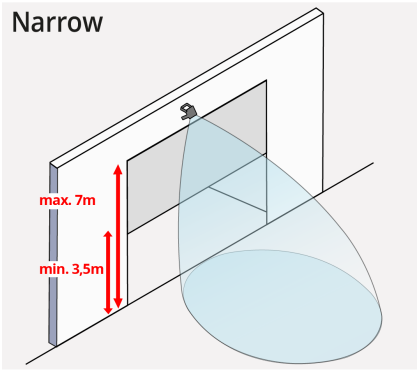

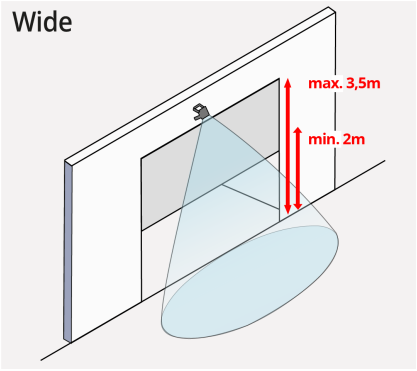

- The manufacturer of the system incorporating the sensor is responsible for compliance of the system to applicable national and international regulations, security and safety standards.
- The sensor cannot be used for purposes other than its intended use.
- Only trained and qualified personnel may install and setup the sensor.
- The installer must read, understand and follow the instructions given in this manual. Improper installation can result in improper sensor operation.
- The manufacturer of the sensor cannot be held responsible for injury or damage resulting from incorrect use, installation or inappropriate adjustment of the sensor.
- It is assumed that no corruption protection is provided by the intended environment of use.
- All wired connections are considered as internal to the complete system.
- Always test the good functioning of the installation before leaving the premises.

2. TIPS

Avoid vibrations, condensation, sudden and extreme temperature changes.	Do not cover the sensor.	Avoid moving objects in the detection field and metallic parts in the sensor's close environment that may obstruct the detection field.

3. DESCRIPTION

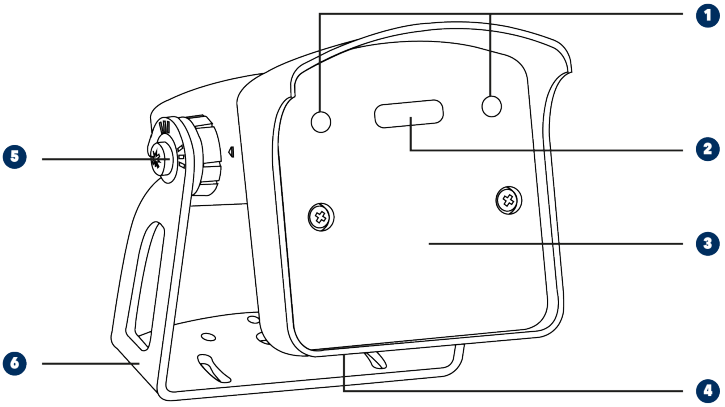

1	Output 1 &2 LED	3	Front face / radar antenna	5	Angle indication
2	Bluetooth®* LED	4	Cable	6	Bracket

LED SIGNALS

Opening	Green LED blinks	LED blinks red-green
Bluetooth®	Red LED blinks	Orange LED blinks x times
LED is off		

* Bluetooth® LED turns off automatically after 30 minutes of operation.

4. WIRING



Connect the wires to the door controller. Choose between NO and NC contact.

5. MOUNTING THE SENSOR

1. **Mounting position**

Position the sensor in the center of the door.

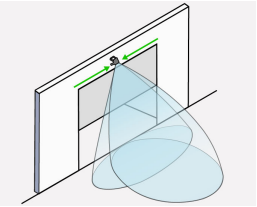

2. **Bracket mounting**

Remove the bracket from the sensor. Drill 2 holes accordingly. Fix the bracket firmly.

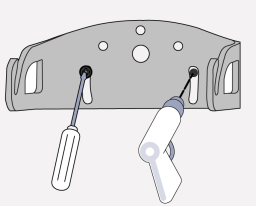

3. **Sensor orientation**

Position the sensor on the bracket.

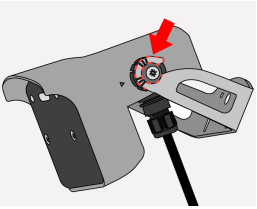

NOTE

Mount the sensor securely. For most installations, we recommend angle 30°.

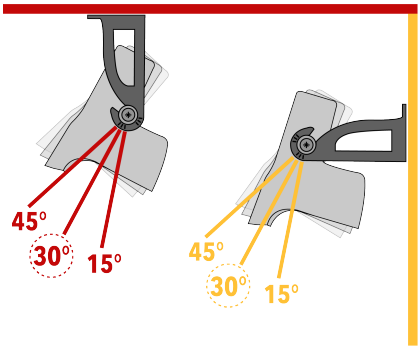

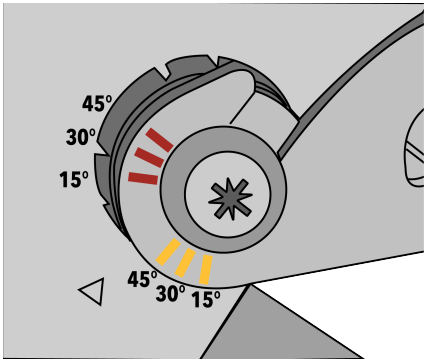

Adjust the angle of the sensor to position the detection field, and fasten the screw firmly.

SELECT RADAR LOBE SHAPE DEPENDING ON THE SENSOR HEIGHT

Mounting Height: **5 m**
Narrow

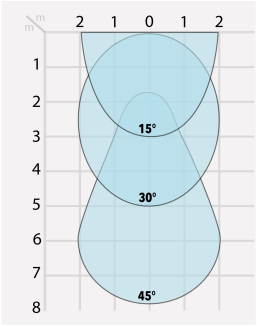

Mounting Height: **3.5 m**
Narrow

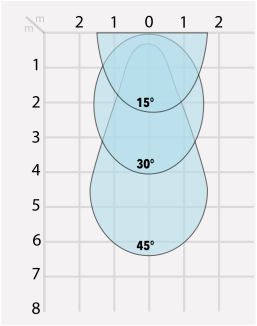

Mounting Height: **2.5 m**
Wide

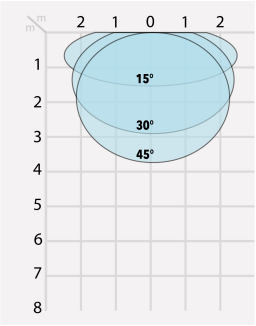

All detection field dimensions are measured in optimal conditions and with field size value 9.

6. INSTALLATION VIA APP

Scan the QR code or open the following link to download the mobileapplication and install it.

https://apps.apple.com/dk/app/falcon-set/id6737254354?platform=watch

https://play.google.com/store/apps/details?id=com.beasensors.falcon&pcampaignid=web_share



The white Bluetooth® LED blinks slowly.
At power ON or after a power cycle, the Bluetooth® keeps activated 30 minutes after last use and then turns off automatically.

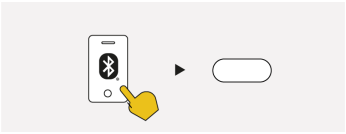

Open the Falcon Artek mobile app and connect it to the sensor. During pairing, Bluetooth® LED blinks quickly.

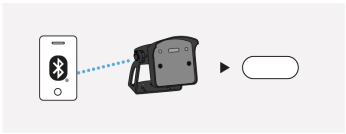

Once paired, the white Bluetooth® LED is on.

Home

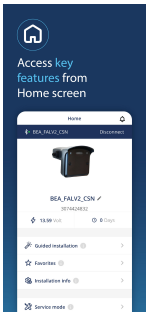

Guided installation

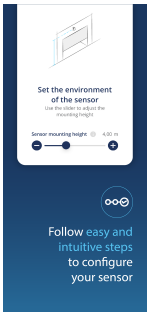

Settings

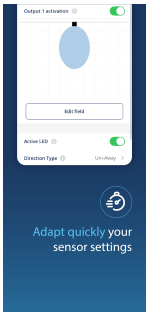

Viewer

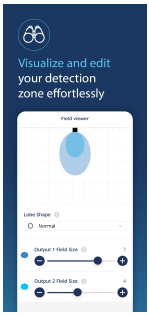

Diagnostic

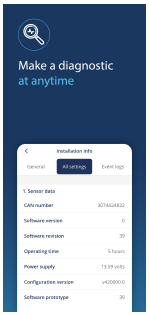

7. SETTINGS

The following settings can be configured via the mobile app for each output independently.

The only parameter that affects both outputs is the lobe shape.

Field Size	0	1	2	3	4	5	6	***7***	8	9
Hold time	***0.5s***	1s	2s	3s	4s	5s	6s	7s	8s	9s
Output logic	***NO***	NC								
Direction mode	Bi	***Uni***	Away Uni							

Factory values

Detection filter settings:

Detection filter		**1**	2	3	4	5	6			

To set the appropriate rejection level to properly filter pedestrians and cross traffic, select the value based on angle and height.

1:	No specific filter
2:	Filter against disturbances
3-6:	See table below to set the appropriate level of filter

	Narrow lobe Mounting height: 3,5m - 7m	**Wide lobe Mounting height: 2m - 3,5m**
15°	3	3
30°	4	4
45°	5	4
+45°	6	5

8. TROUBLESHOOTING

LED	Status	Explanation / Solution
	The door remains closed. The LED stays off.	**The sensor power is off. Check the wiring and the power supply** The door control setting is set to value "closed". Change the door control setting to "Auto" via mobile app
	The door does not react as expected. The blue LED lights up when door is closed.	**Improper output configuration on the sensor.** Change the output configuration setting on each sensor connected to the door operator via mobile app
	The door opens and closes constantly. The blue LED lights up regularly.	**The sensor is disturbed by the door motion or vibrations caused by the door motion.** Make sure the sensor is fixed properly.
	The door opens for no apparent reason. The blue LED lights up.	**In airlock vestibules, the sensor detects the movement of the opposite door.** Adjust the detection field dimensions via mobile app.
	The Orange LED is on permanently.	**The sensor encounters a memory problem.** Replace the sensor.
	The orange LED blinks 1x.	**The sensor signals an internal fault.** Cut and restore power supply. If the LED blinks again, replace the sensor.
	The Orange LED blinks 2x.	**Power supply is out of limit.** 1. Check power supply. 2. Reduce the cable length or change the cable. **Internal temperature is too high.** Protect the sensor from heat source (sun, hot, air...).
	The door does not react as expected. The Orange LED blinks 3x.	**Internal communication error.** Cut and restore power supply. If the LED blinks again, replace sensor.

9. TECHNICAL SPECIFICATIONS

Technology	Microwave doppler radar
Transmitter frequency	24.150 GHz
Transmitter radiated power	< 20 dBm EIRP
Transmitter power density	< 5 mW/cm²
Detection mode	Motion
Detection zone	4 x 5m (typical at 30° and field size 9)
Min. detection speed	5 cm/s
Mounting angles	15° - 45°
Supply voltage*	12V to 24V AC +/- 10% (50 - 60 Hz) ; 12V to 24V DC +30% / -10%
Max Power consumption	< 2W
Cable length	10 m
Output*:	1 electro-mechanical relay • Max 1A / 42VDC / 30VAC 1 electro relay (galvanic isolated - polarity free) • Max 100mA / 42VDC / 30VAC
LED	2 RGB LEDs: detection/output status 1 white LED: BLE status
Mounting Height	2m - 7m
Dimensions	120 mm (L) × 50 mm (H) × 50 mm (W)
Material	PC/ASA/black
Degree of protection	IP65 (IEC/EN60529)
Temperature range	-30°C to +60°C if powered; -10°C to +60°C unpowered
Humidity	0-95 % non-condensing
Vibrations	<2g
Weight	290g
Weighted emission sound pressure level	<70dB (A)
Bluetooth®**	Operating bandwidth: 2402 MHz – 2480 MHz Maximum transmitted power: 12 dBm

Specifications are subject to changes without prior notice. All values measured in specific conditions.

*External electrical sources must be within specified voltages and ensure double insulation from primary voltages.

** The Bluetooth® word mark and logos are registered trademarks owned by Bluetooth SIG, Inc. and any use of such marks by BEA is under license. Other trademarks and trade names are those of their respective owners

10. CONFORMITY

BEA Sensors hereby declares that this product is in compliance with European legislation, 2014/53/EU (RED) and 2011/65/EU (RoHS). The complete declaration of conformity is available on our website.	CE
This product should be disposed of separately from unsorted municipal waste.	

www.beasensors.com
BEA SA | LIEGE Science Park | ALLÉE DES NOISETIERS 5 - 4031 ANGLEUR [BELGIUM] | T +32 4 361 65 65 | F +32 4 361 28 58 | info-eu@beasensors.com| WWW.BEASENSORS.COM

A **Halma** company

Manufactured by: BEA SA - LIEGE Science Park - Allée des Noisetiers 5 - 4031 Angleur - Belgium - T +32 4 3616565 - F +32 4 3612858 - info-eu@beasensors.com - www.beasensors.com

PLEASE KEEP FOR FURTHER USE - DESIGNED FOR COLOUR PRINTING

©BEA Sensors | Original Instructions | 47.1087.01| 03.26