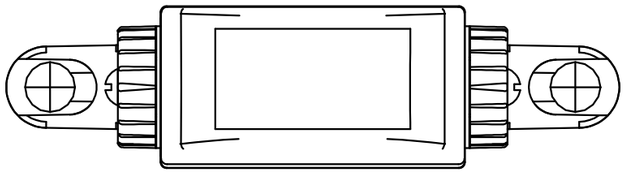

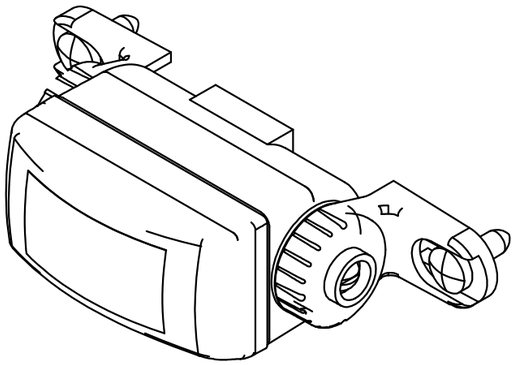

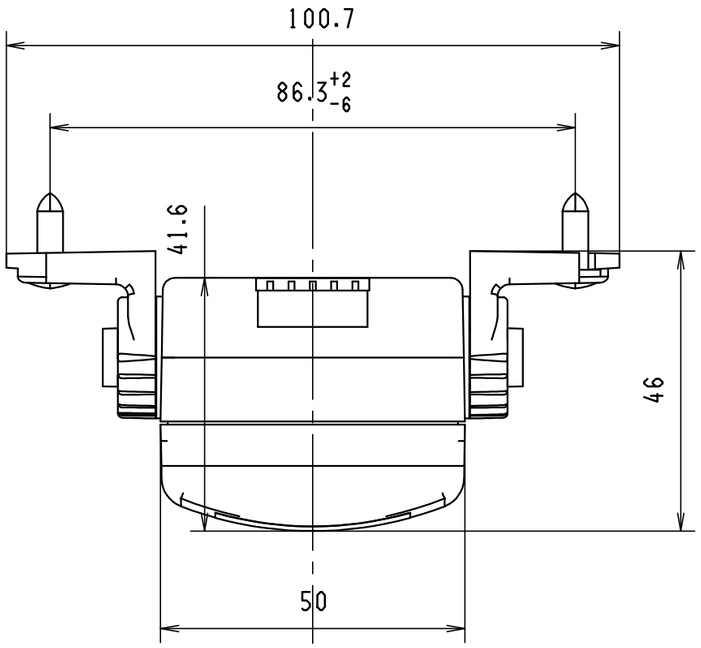


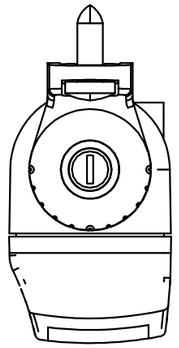

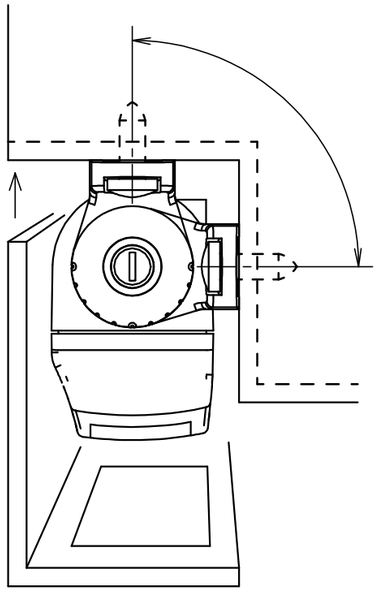

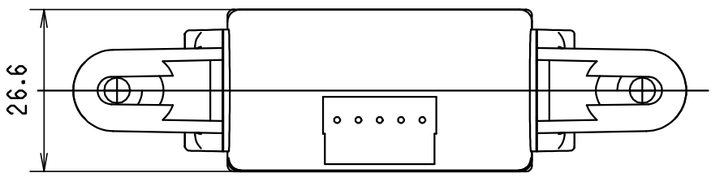


THIS DRAWING IS THE PROPERTY OF **BEA** AND MAY NOT BE REPRODUCED WITHOUT WRITTEN AGREEMENT

| | | | |
|---|---|---|---|
| BEA | 1 | TITLE : FLY Dimensions | |
| | 2 | DRAWER : ML | DATE : 20/06/2001 |
| | 3 | SC : 1/1 | SIZE : A3 |
| | 4 | MATERIAL :- | |
| LIEGE-BELGIUM | 5 | TREATMENT:- | |
| VERIFIED / APPROVED | 6 | GENERAL TOLERANCE :- | |
| | 7 | C.A.O. FILE: MCADAM/BER1/E006/FLY_DIM.NA | |

MODIFICATIONS LIST

| DATE: | BY: | DESCRIPTION: | REL. | VER. |
|---|---|---|---|---|
| | | | | |

| | | | |
|---|---|---|---|
| DOC. : PA | OBJET: 41.5496 | VER. : NA | PAGE: 01/01 |