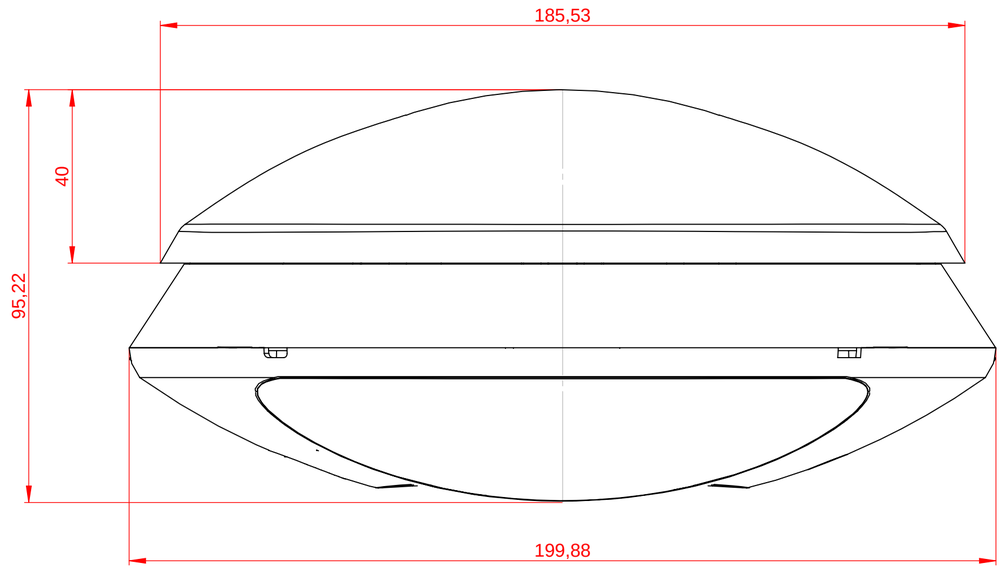

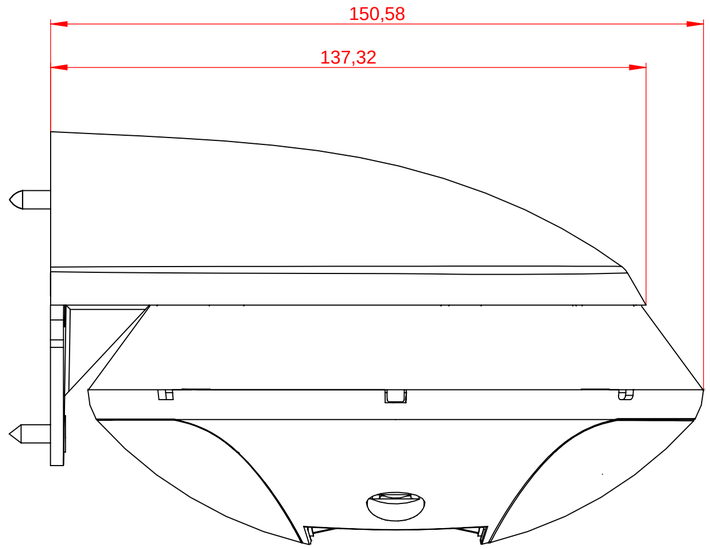

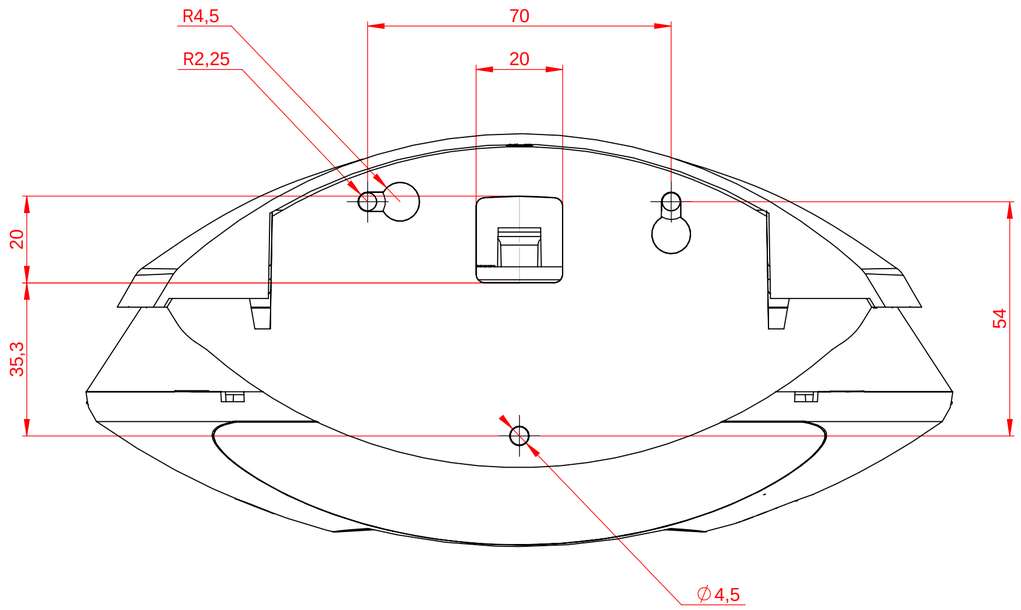

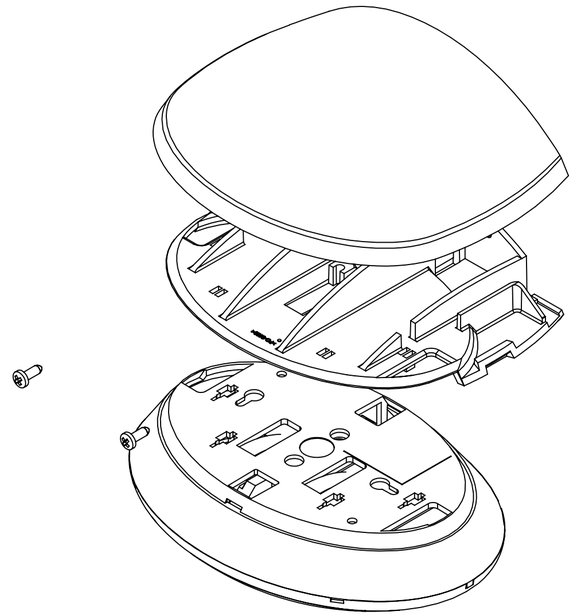

Part Volume : mm³ - Part Weight : gr

THIS DRAWING IS THE PROPERTY OF BEA AND MAY NOT BE REPRODUCED WITHOUT WRITTEN AGREEMENT

MODIFICATIONS LIST

Date :	By :	Description :	Ver :	Rev :

! (! , - ! # / - 0 ! . 9
WWW.BEA.BE

PROD. NAME : E363 - Stand-alone People Counting - Sigma
TITLE : Wall installation dimensions
GENERAL TOLERANCE : -
MATERIAL: - TREATEMENT: -

Objet	Ver.Obj	Doc.	Rev.Doc.	Scale	Size
E363 . A . PA . 01				1:2	A2

DRAWER : -
DATE : -
VERIFIED APPROVED

PAGE: 1 / 1

PDM Project : - File Name : **Wall installation Dimensions**