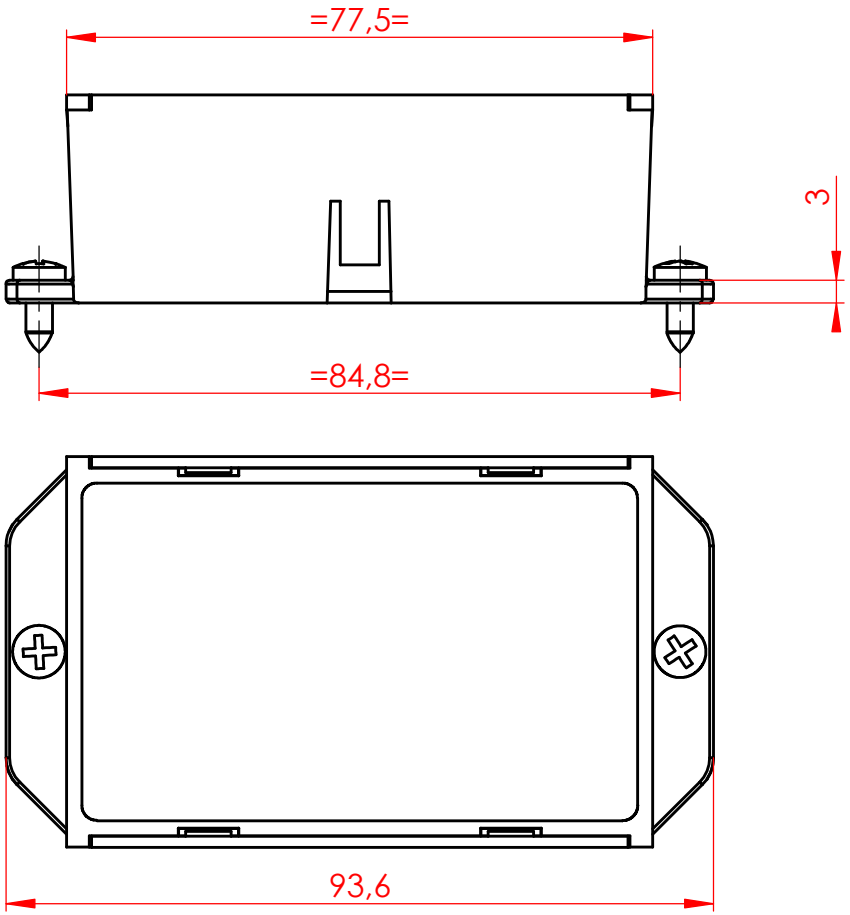

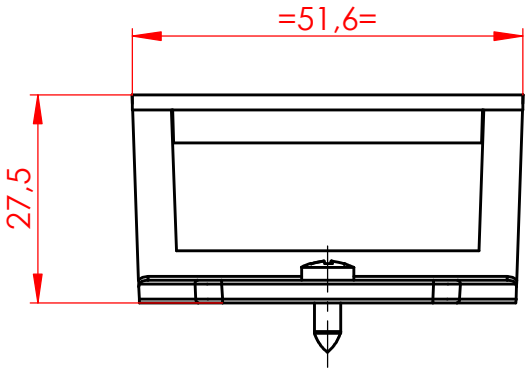

THIS DRAWING IS THE PROPERTY OF BEA AND MAY NOT BE REPRODUCED WITHOUT WRITTEN AGREEMENT

MODIFICATIONS LIST

DATE :	BY :	DESCRIPTION :	REL :	VER :
-	-	-	-	-
-	-	-	-	-
-	-	-	-	-
-	-	-	-	-
-	-	-	-	-

Parc scientifique du Sart-Tilman
5, allée des noisetiers
4031 Angleur - BELGIUM
Tel.: +0032(4) / 361.68.68

PROD. NAME : MICROCELL / MICROHEAD / MICROHEAD 8 / EAS	SC : 1:1	DRAWER : PR	
TITLE : MICROCELL BOX DIM_NA	SIZE : A4	DATE : 24/05/2004	
GENERAL TOLERANCE :-		VERIFIED	APPROVED
MATERIAL:-	TREATEMENT:-		
C.A.O. FILE : G:\SW\projets\E001 - Microcell\46_0348 Microcell Box DIM_NA			
DOC.: PA	OBJET :46.0348	VER.: NA	PAGE: 1 / 1